Using the Rel Comm WG22 switches at 24GHz.

Waveguide switches for use at 24GHz are highly desirable but can be hard to find. That is until the Wellington VHF Group offered some WG22/WR28 switches for sale at NZ$80 each or about £35 including postage See Fig 1. At 24GHz most of us use WG20/WR42 but these switches are quite useable and suitable adaptors are not hard to make. I have tried two methods. Both involve making a special flange which accepts WG20 but has fixing holes to fit those on the Rel Comm waveguide switch which are for WG22 flanges. One method is to make these special flanges with integral ¼ λ chokes as described by Dick Kolbly K6HIJ in Microwave Update 2004 P295. The other is to simply add matching screws close to the transition.

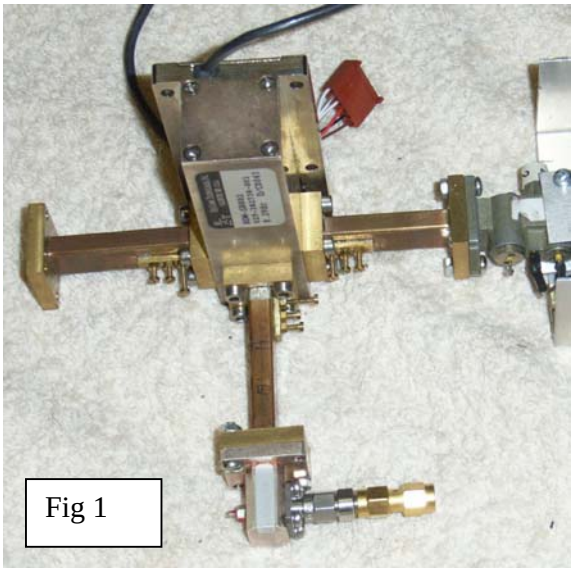

Fig 1

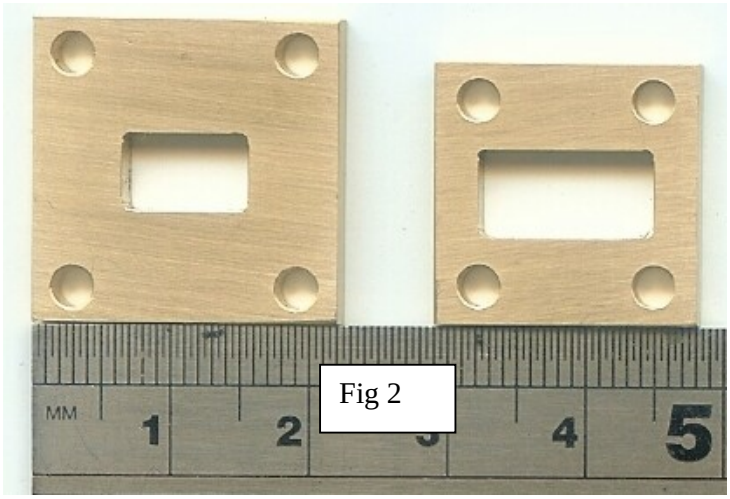

Fig 2

In fact I found that the ¼ Lambda λ chokes also needed matching screws to achieve a good match so I consider there to be little point in the additional complication of machining the choke when a plain flange appears to work just as well.

Another possibility is to use WG22 throughout your system in which case the problem of interfacing moves away from the Rel Comm waveguide switch perhaps to other devices such as pre amplifiers and Power Amplifiers which may require WG20. I have not tried this configuration but expect that matching screws will be needed near the transition. This approach will be attractive to those who have plentiful supplies of WG22.

Fig 2 shows the two kinds of special flanges. On the left is one that fits WG22 but has fixings for WG20 while on the right is one to fit WG20 but with fixing holes to suit WG22. Ian G8CPJ has made both kinds of flange and I have a small stock available at £15 + P&P for a set of 3. If there is demand, Ian is happy to make more at the same price.

Figs 3 and 4 show the WG20/WR42 to WG22/WR28 adaptors. The Flange on the left, closest to the tuning screws, has fixing holes to suit waveguide 22 but the waveguide cut out is for WG20. The screws need to be close to the WG20 – 22 interface.

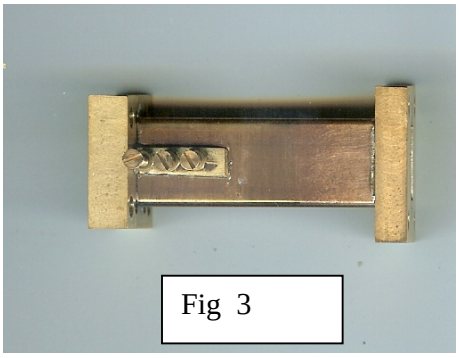

Fig 3

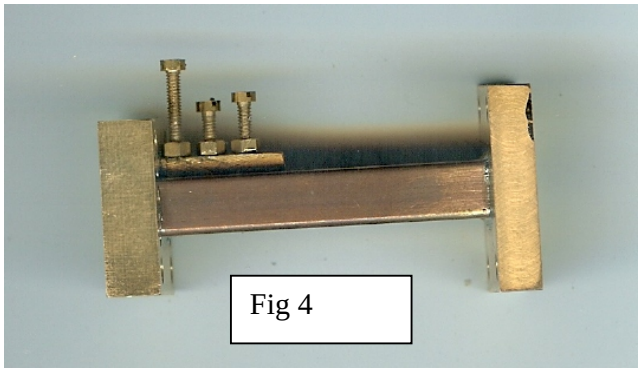

Fig 4

I found that I could achieve a return loss from a WG20 source, through the waveguide switch to a known good WG20 load of 20dB or more. I could also get the insertion loss down below 0.5dB. Some patience is required to achieve both these figures at the same time! I do not have calibrated test equipment at 24GHz but my relative measurements are likely to be reasonable. You will need a 24GHz source, a WG20 directional coupler and reasonably good WG20 (and / or WG22) load to set the switch up (unless you have access to more exotic test equipment such as a network Analyser).

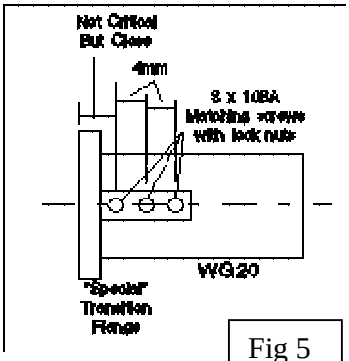

Fig 5

If you need help please ask a member of the UkuG Technical support team.

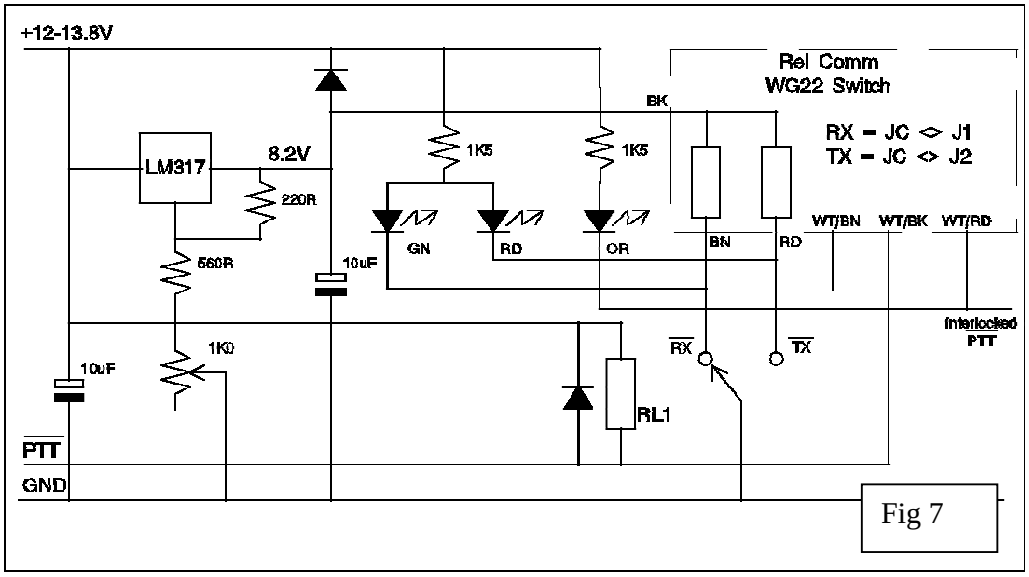

Fig 7

The switch requires a supply of 8.2V and is of the latching type so it requires only a change over switch to operate it. See Fig 7 Tell tale contacts are included so an interlocked PTT signal can be made available, which if combined with the PTT signal to operate the transmit section, should obviate the need for a sequencer. Isolation was measured as in excess of 60dB so provided care is taken over the matching, particularly on transmit, the switch should be satisfactory at power levels of up to 20W maybe even more.